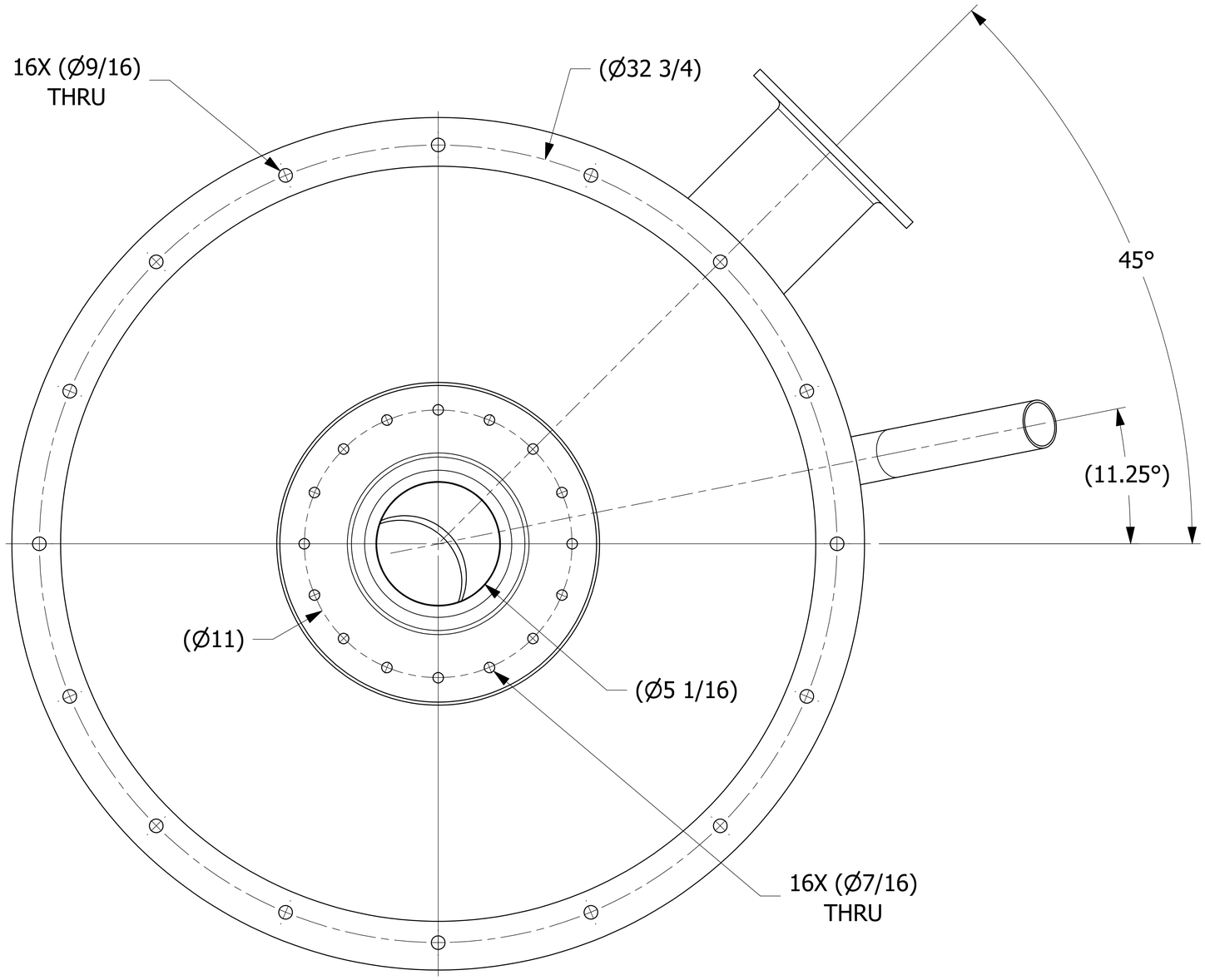

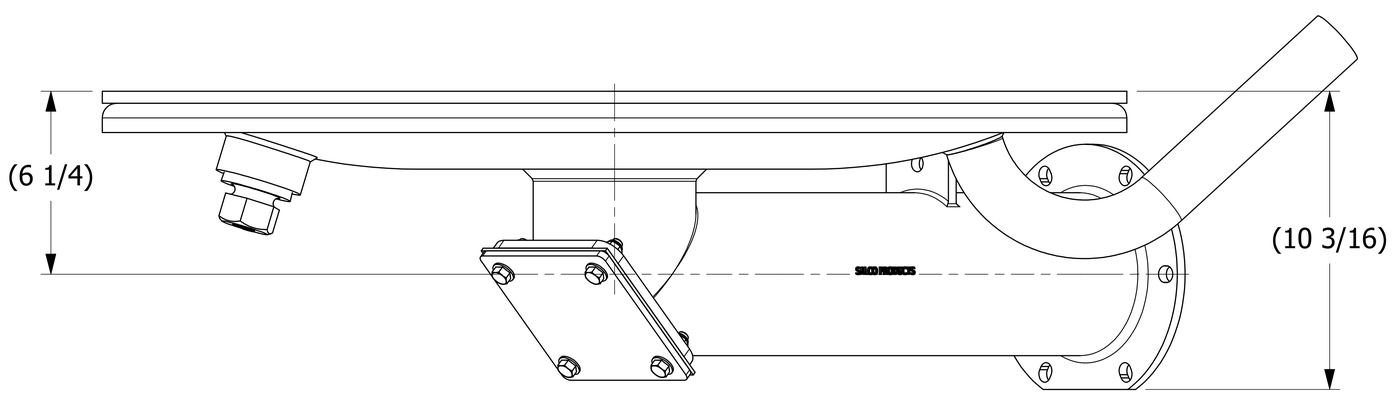

SALES DRAWING SALES DRAWING

SALES DRAWING SALES DRAWING

REV	BY	DATE	DESCRIPTION
G	TAK	10-11-17	UPDATED PD1AH, ADDED NOTE 4
F	JJK	8-14-14	REMOVED TCP2 FROM THE BOM
E	CHL	8-29-08	REPLACED PD5ADT01,PD545ACP W/PD5ACDT01,PD545ACP2
D	BRG	2-22-08	UPDATED TC2P TO CS/DI
C	CHL	8-23-07	ADDED NOTE 4
B	ACC	7-28-03	LINING WAS POLYCLUTCH
A	ACC	2-15-02	UPDATED NOTES, PLATE ASS'Y WAS PD5ACPA

NOTES:
1. HOPPER BODY IS LINED WITH CARBOLINE 892.
2. FOR HOPPERS TO THE RIGHT OF THE Y-PIPE.
3. ALL BOLTS ARE 18-8 SS, ALL NUTS ARE CS Z/P.

UNLESS OTHERWISE SPECIFIED
DIMENSIONAL TOLERANCES
FRACTIONAL: ±1/16
X.XX: ±.03
X.XXX: ±.015
ANGULAR: ±1°
DEBURR ALL SHARP EDGES.
ALL MACHINED SURFACES TO HAVE A 125 RMS FINISH UNLESS NOTED OTHERWISE.
THIRD ANGLE PROJECTION

DRAWN BY:	ACC
CHECKED BY:	AVD
PROTOTYPE BY:	ACC
PROTOTYPE DATE:	11/28/2001
APPROVED FOR PRODUCTION BY:	AVD
PRODUCTION DATE:	11/28/2001

SALCO PRODUCTS, INC.

PART NAME: HOPPER AERATOR ASSEMBLY LEFT

MATERIAL: CARBON STEEL/ALUMINUM

PROJECT #: 010910 | SHEET #: 1 OF 1 | SCALE: 1:1

DRAWING #: E16459 | PART #: PD1AHLA

THIS PRINT, PROPERTY OF SALCO PRODUCTS INC, CONTAINS PROPRIETARY INFORMATION AND MUST NOT BE COPIED, REPRODUCED, OR USED DETRIMENTALLY TO OUR INTEREST.